Electrolux PROFESSIONAL

SkyLine PremiumS LPG Gas Combi Oven 20GN1/1

ITEM #

MODEL #

NAME #

SIS #

AIA #

217709 (ECOG201T3H30)

SkyLine PremiumS Combi Boiler Oven with touch screen control, 20x1/1GN, gas, 3 cooking modes (automatic, recipe program, manual), automatic cleaning, 3-glass door - LPG

Short Form Specification

Item No.

Combi oven with high resolution full touch screen interface, multilanguage
- Built-in steam generator with real humidity control based upon Lambda Sensor
- OptiFlow air distribution system to achieve maximum performance with 7 fan speed levels
- SkyClean: Automatic and built-in self cleaning system with integrated descale of the steam generator. 4 automatic cycles (short, medium, intensive, rinse) and green functions to save energy, water, detergent and rinse aid
- Cooking modes: Automatic (9 food families with 100+ different pre-installed variants); Programs (a maximum of 1000 recipes can be stored and organized in 16 different categories); Manual (steam, combi and convection cycles); Specialistic Cycles (regeneration, Low Temperature Cooking, proving, EcoDelta, Sous-Vide, Static-Combi, Pasteurization of pasta, dehydration, Food Safe Control and Advanced Food Safe Control)
- Special functions: MultiTimer cooking, Plan-n-Save to cut running costs, Make-it-Mine to customize interface, SkyHub to customize homepage, agenda MyPlanner, SkyDuo connection to SkyLine ChillerS, automatic backup mode to avoid downtime
- USB port to download HACCP data, programs and settings
- Connectivity for real time access, remote software update, HACCP, recipe and energy management (optional)
- 6-point multi sensor core temperature probe
- Triple-glass door with double LED lights line.
- Stainless steel construction throughout
- Supplied with n.1 trolley rack 1/1 GN, 63 mm pitch.
- Adjustable levelling feet.

APPROVAL:

Main Features

- Built-in steam generator for highly precise humidity and temperature control according to the chosen settings.
- Real humidity control based upon Lambda Sensor to automatically recognize quantity and size of food for consistent quality results.
- OptiFlow air distribution system to achieve maximum performance in chilling/heating eveness and temperature control thanks to a special design of the chamber.
- 6-point multi sensor core temperature probe for maximum precision and food safety.
- Fan with 7 speed levels from 300 to 1500 RPM and reverse rotation for optimal evenness. Fan stops in less than 5 seconds when door is opened.
- Dry, hot convection cycle (25 °C - 300 °C): ideal for low humidity cooking.
- Combination cycle (25 °C - 300 °C): combining convected heat and steam to obtain humidity controlled cooking environment, accelerating the cooking process and reducing weight loss.
- SkyClean: Automatic and built-in self cleaning system with 4 automatic cycles (short, medium, intensive, rinse) and integrated descale of the steam generator.
- Low temperature Steam cycle (25 °C - 99 °C): ideal for sous-vide, re-thermalization and delicate cooking.
  Steam cycle (100 °C): seafood and vegetables.
  High temperature steam (101 °C - 130 °C).
- Short cleaning cycle: optimized cleaning cycle with a duration of just 33 minutes, improving efficiency and reducing downtime.
- Automatic mode including 9 food families (meat, poultry, fish, vegetables, pasta/rice, eggs, savory and sweet bakery, bread, dessert) with 100+ different pre-installed variants. Through Automatic Sensing Phase the oven optimizes the cooking process according to size, quantity and type of food loaded to achieve the selected cooking result. Real time overview of the cooking parameters. Possibility to personalize and save up to 70 variants per family.
- Cycles :
  - Regeneration (ideal for banqueting on plate or rethermalizing on tray),
  - Low Temperature Cooking (to minimize weight loss and maximize food quality) Patented US7750272B2 and related family,
  - Proving cycle,
  - EcoDelta cooking, cooking with food probe maintaining preset temperature difference between the core of the food and the cooking chamber,
  - Sous-vide cooking,
  - Static Combi (to reproduce traditional cooking from static oven),
  - Pasteurization of pasta,
  - Dehydration cycle (ideal for drying fruits, vegetables, meats, seafood),
  - Food Safe Control (to automatically monitor safety of cooking process in compliance with HACCP hygienic standards) Patented US6818865B2 and related family,
  - Advanced Food Safe Control (to drive the cooking

with pasteurization factor).

- Programs mode: a maximum of 1000 recipes can be stored in the oven's memory, to recreate the exact same recipe at any time. The recipes can be grouped in 16 different categories to better organize the menu. 16-step cooking programs also available.
- MultiTimer function to manage up to 60 different cooking cycles at the same time, improving flexibility and ensuring excellent cooking results. Can be saved up to 200 MultiTimer programs.
- Automatic fast cool down and pre-heat function.
- Back-up mode with self-diagnosis is automatically activated if a failure occurs to avoid downtime.
- GreaseOut: integrated grease drain and collection kit (to use the kit, the oven must be ordered as special code).
- Electrolux Professional recommends the use of treated water to guarantee optimal cooking results and extend the life of the appliance. Check local water condition to select the appropriate water filter. More info available on the website.

Construction

- Integrated spray gun with automatic retracting system for fast rinsing.
- Triple thermo-glazed door with 2 hinged inside panels for easy cleaning and double LED lights line.
- Hygienic internal chamber with all rounded corners for easy cleaning.
- 304 AISI stainless steel construction throughout.
- Front access to control board for easy service.
- IPX5 spray water protection certification for easy cleaning.

User Interface & Data Management

- High resolution full touch screen interface (translated in more than 30 languages) - color-blind friendly panel.
- Make-it-mine feature to allow full personalization or locking of the user interface.
- SkyHub lets the user group the favorite functions in the homepage for immediate access.
- MyPlanner works as an agenda where the user can plan the daily work and receive personalized alerts for each task.
- Automatic consumption visualization at the end of the cycle.
- USB port to download HACCP data, share cooking programs and configurations. USB port also allows to plug-in sous-vide probe (optional accessory).
- Connectivity for remote real time access, easy HACCP management, equipment uptime increase, consumption tracking and energy management (requires optional accessory).
- With SkyDuo the Oven and the Blast Chiller are connected to each other and communicate in order to guide the user through the cook&chill process optimizing time and efficiency (requires optional accessory).
- Trainings and guidances supporting materials easily accessible by scanning QR-Code with any mobile device.
- Pictures upload for full customization of cooking cycles.

Sustainability

- Wing-shaped handle with ergonomic design and hands-free opening with the elbow, making managing trays simpler. Protected by registered design (EM003143551 and related family).
- Energy Star 2.0 certified product.
- Reduced power function for customized slow cooking cycles.
- The outer cardboard packaging is made from 70% recycled materials and FSC*-certified paper, printed with eco-friendly, water-based ink to support sustainability and environmental responsibility.

  (*Forest Stewardship Council is the world's leading organization for sustainable forest management).
- Triple-glass door minimize your energy loss.*

  *Approx. -10% of idle energy consumption in convection based on test in compliance with ASTM Standard F2861-20
- Uses 33% less water, 43% less detergent and 25% less energy with the new washing cycles.*

  *Based on Internal test done in Electrolux Professional Laboratory comparing actual SkyLine 20 GN1/1 electric combi oven with boiler vs the previous version.
- Plan-n-Save function organizes the cooking sequence of the chosen cycles optimizing the work in the kitchen from a time and energy efficiency point of view.
- Zero Waste provides chefs with useful tips for minimizing food waste. Zero Waste is a library of Automatic recipes that aims to: - give a second life to raw food close to expiration date (e.g., from milk to yogurt) - obtain genuine and tasty dishes from overripe fruit/vegetables (usually considered not appropriate for sale) - promote the use of typically discarded food items (e.g., carrot peels).
- Save energy, water, detergent and rinse aid with SkyClean green functions.
- C22 and C25 detergents are formulated without phosphates and phosphorus (C25 is also maleic acid-free), making them safe for both the environment and human health.

Included Accessories

1 of Trolley with tray rack, 20 GN 1/1, 63mm pitch	PNC 922753	

Optional Accessories

External reverse osmosis filter for single tank Dishwashers with atmosphere boiler and Ovens	PNC 864388	❑
Water filter with cartridge and flow meter for high steam usage (combi used mainly in steaming mode)	PNC 920003	❑
Water filter with cartridge and flow meter for medium steam usage	PNC 920005	❑
Pair of AISI 304 stainless steel grids, GN 1/1	PNC 922017	❑
Pair of grids for whole chicken (8 per grid - 1,2kg each), GN 1/1	PNC 922036	❑
AISI 304 stainless steel grid, GN 1/1	PNC 922062	❑
Grid for whole chicken (4 per grid - 1,2kg each), GN 1/2	PNC 922086	❑
External side spray unit (needs to be mounted outside and includes support to be mounted on the oven)	PNC 922171	❑
Baking tray for 5 baguettes in perforated aluminum with silicon coating, 400x600x38mm	PNC 922189	❑
Baking tray with 4 edges in perforated aluminum, 400x600x20mm	PNC 922190	❑
Baking tray with 4 edges in aluminum, 400x600x20mm	PNC 922191	❑
Pair of frying baskets	PNC 922239	❑
AISI 304 stainless steel bakery/pastry grid 400x600mm	PNC 922264	❑

The company reserves the right to make modifications to the products without prior notice. All information correct at time of printing.

- Grid for whole chicken (8 per grid - 1,2kg each), GN 1/1 PNC 922266 ❑
- USB probe for sous-vide cooking PNC 922281 ❑
- Grease collection tray, GN 1/1, H=100 mm PNC 922321 ❑
- Kit universal skewer rack and 4 long skewers for Lenghtwise ovens PNC 922324 ❑
- Universal skewer rack PNC 922326 ❑
- 4 long skewers PNC 922327 ❑
- Grease collection tray, GN 1/1, H=40 mm PNC 922329 ❑
- Volcano Smoker for lengthwise and crosswise oven PNC 922338 ❑
- Multipurpose hook PNC 922348 ❑
- Grid for whole duck (8 per grid - 1,8kg each), GN 1/1 PNC 922362 ❑
- Thermal cover for 20 GN 1/1 oven and blast chiller freezer PNC 922365 ❑
- Wall mounted detergent tank holder PNC 922386 ❑
- USB single point probe PNC 922390 ❑
- IoT module for OnE Connected (Combi Ovens, Blast chiller/freezers, Rack Type DW) and SkyDuo (one IoT board per appliance - to connect oven to blast chiller for Cook&Chill process). PNC 922421 ❑
- Connectivity router (WiFi and LAN) PNC 922435 ❑
- Elevating kit with trolley height extension for 20 GN 1/1 oven PNC 922446 ❑
- External connection kit for liquid detergent and rinse aid PNC 922618 ❑
- Dehydration tray, GN 1/1, H=20mm PNC 922651 ❑
- Flat dehydration tray, GN 1/1 PNC 922652 ❑
- Heat shield for 20 GN 1/1 oven PNC 922659 ❑
- Kit to convert from natural gas to LPG PNC 922670 ❑
- Kit to convert from LPG to natural gas PNC 922671 ❑
- Flue condenser for gas oven PNC 922678 ❑
- Trolley with tray rack, 15 GN 1/1, 84mm pitch PNC 922683 ❑
- Kit to fix oven to the wall PNC 922687 ❑
- 4 flanged feet for 20 GN , 2", 100-130mm PNC 922707 ❑
- Mesh grilling grid, GN 1/1 PNC 922713 ❑
- Probe holder for liquids PNC 922714 ❑
- Levelling entry ramp for 20 GN 1/1 oven PNC 922715 ❑
- Exhaust hood with fan for 20 GN 1/1 oven PNC 922730 ❑
- Exhaust hood without fan for 20 1/1GN oven PNC 922735 ❑
- Stainless steel drain kit for 20 GN oven, dia=50mm PNC 922738 ❑
- Plastic drain kit for 20 GN oven, dia=50mm PNC 922739 ❑
- Holder for trolley handle (when trolley is in the oven) for 20 GN oven PNC 922743 ❑
- Tray for traditional static cooking, H=100mm PNC 922746 ❑
- Double-face griddle, one side ribbed and one side smooth, 400x600mm PNC 922747 ❑
- Hood Hopper to directly connect the Hood to the centralized ventilation system, for Standard Hoods (with fan motor) and Hoods without fan motor PNC 922751 ❑
- Trolley with tray rack, 20 GN 1/1, 63mm pitch PNC 922753 ❑
- Trolley with tray rack, 16 GN 1/1, 80mm pitch PNC 922754 ❑
- Banquet trolley with rack holding 54 plates for 20 GN 1/1 oven and blast chiller freezer, 74mm pitch PNC 922756 ❑
- Bakery/pastry trolley with rack holding 600x400mm grids for 20 GN 1/1 oven and blast chiller freezer, 80mm pitch (16 runners) PNC 922761 ❑
- Banquet trolley with rack holding 45 plates for 20 GN 1/1 oven and blast chiller freezer, 90mm pitch PNC 922763 ❑
- Kit compatibility for aos/easyline trolley (produced till 2019) with SkyLine/ Magistar 20 GN 1/1 combi oven PNC 922769 ❑
- Kit compatibility for aos/easyline 20 GN oven with SkyLine/Magistar trolleys PNC 922771 ❑
- Water inlet pressure reducer PNC 922773 ❑
- Extension for condensation tube, 37cm PNC 922776 ❑
- Non-stick universal pan, GN 1/ 1, H=40mm PNC 925001 ❑
- Non-stick universal pan, GN 1/1, H=60mm PNC 925002 ❑
- Double-face griddle, one side ribbed and one side smooth, GN 1/1 PNC 925003 ❑
- Aluminum grill, GN 1/1 PNC 925004 ❑
- Frying pan for 8 eggs, pancakes, hamburgers, GN 1/1 PNC 925005 ❑
- Flat baking tray with 2 edges, GN 1/1 PNC 925006 ❑
- Baking tray for 4 baguettes, GN 1/1 PNC 925007 ❑
- Potato baker for 28 potatoes, GN 1/1 PNC 925008 ❑
- Non-stick universal pan, GN 1/2, H=20mm PNC 925009 ❑
- Non-stick universal pan, GN 1/2, H=40mm PNC 925010 ❑
- Non-stick universal pan, GN 1/2, H=60mm PNC 925011 ❑
- Kit of 6 non-stick universal pans, GN 1/1, H=20mm PNC 925012 ❑
- Kit of 6 non-stick universal pans, GN 1/1, H=40mm PNC 925013 ❑
- Kit of 6 non-stick universal pan GN 1/1, H=60mm PNC 925014 ❑

Recommended Detergents

- C25 Rinse & Descale Tabs, phosphate-free, phosphorous-free, maleic acid-free, 50 tabs bucket PNC 0S2394 ❑
- C22 Cleaning Tabs, phosphate-free, phosphorous-free, 100 bags bucket PNC 0S2395 ❑

The company reserves the right to make modifications to the products without prior notice. All information correct at time of printing.

SkyLine PremiumS
LPG Gas Combi Oven 20GN1/1

Electric	
Supply voltage:	220-240 V/1 ph/50 Hz
Electrical power, max:	1.8 kW
Electrical power, default:	1.8 kW
Gas	
Total thermal load:	217344 BTU (54 kW)
Gas Power:	54 kW
Standard gas delivery:	LPG, G31
ISO 7/1 gas connection diameter:	1" MNPT
Water:	
Inlet water temperature, max:	30 °C
Inlet water pipe size (CWI1, CWI2):	3/4"
Pressure, min-max:	1-6 bar
Chlorides:	<17 ppm
Conductivity:	>50 µS/cm
Drain "D":	50mm
Capacity:	
Trays type:	20 (GN 1/1)
Max load capacity:	100 kg
Key Information:	
Door hinges:	Right Side
External dimensions, Width:	911 mm
External dimensions, Depth:	864 mm
External dimensions, Height:	1794 mm
Weight:	324 kg
Net weight:	291 kg
Shipping weight:	324 kg
Shipping volume:	1.83 m³
ISO Certificates	
ISO Standards:	ISO 9001; ISO 14001; ISO 45001; ISO 50001

The company reserves the right to make modifications to the products without prior notice. All information correct at time of printing.

SkyLine PremiumS
LPG Gas Combi Oven 20GN1/1

Front

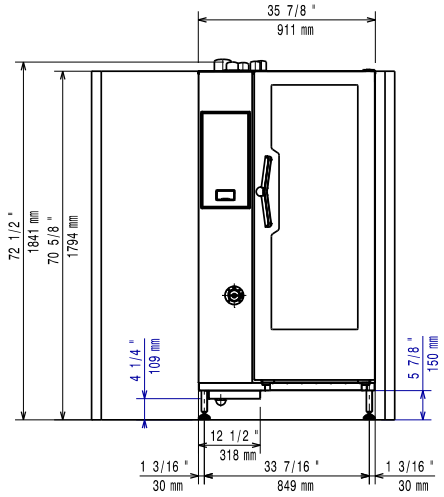

Side

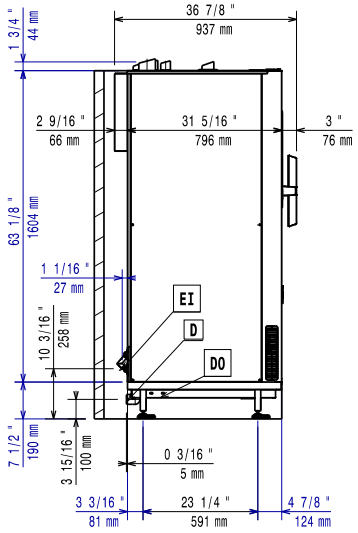

CWI1 = Cold Water inlet 1 (cleaning)
CWI2 = Cold Water Inlet 2 (steam generator)
D = Drain
DO = Overflow drain pipe
EI = Electrical inlet (power)
G = Gas connection

Top

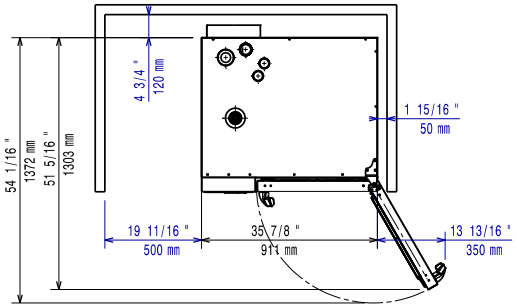

Distances

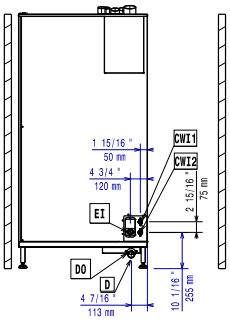

CWI1 = Cold Water inlet 1 (cleaning)
CWI2 = Cold Water Inlet 2 (steam generator)
D = Drain
DO = Overflow drain pipe
EI = Electrical inlet (power)
G = Gas connection

SkyLine PremiumS
LPG Gas Combi Oven 20GN1/1

The company reserves the right to make modifications to the products without prior notice. All information correct at time of printing.

2026.03.10